SIZE	DN	L	ØD	n-UnC	&°
2"	50	42	120.7	4-UnC 5/8"	90°
2 1/2"	65	44.7	139.7	4-UnC 5/8"	90°
3"	80	45.2	152.4	4-UnC 5/8"	90°
4"	100	52.1	190.5	8-UnC 5/8"	45°
6"	150	55.8	241.3	8-UnC 3/4"	45°

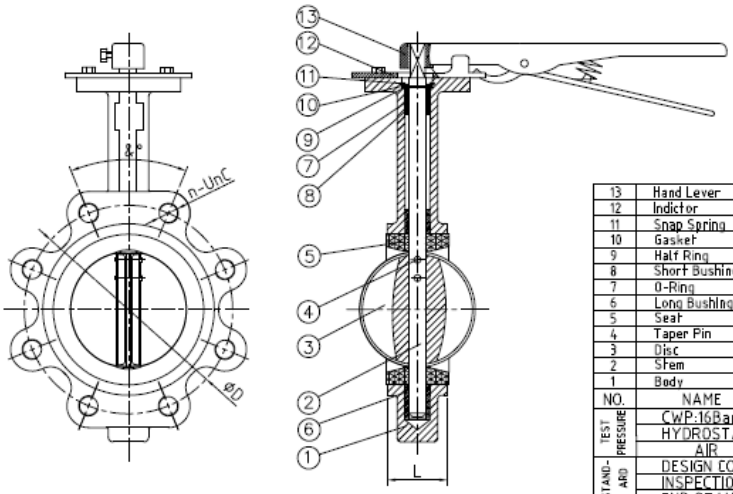

NO.	NAME	MATERIAL	QTY
13	Hand Lever	Assembly	1
12	Indictor	Carbon Steel	1
11	Snap Spring	SK7	1
10	Gasket	A276 SS304	1
9	Half Ring	A276 SS304	1
8	Short Bushing	PTFE	2
7	O-Ring	EPDM	1
6	Long Bushing	PTFE	2
5	Seat	EPDM	1
4	Taper Pin	A276 SS316	2
3	Disc	A351 CF8M	1
2	Stem	A276 SS416	1
1	Body	Ductile Iron ASTM A536	1

TEST PRESSURE	CWP:16Bar	SHELL	SEAL
	HYDROSTATIC	24 bar	17.6 bar
	AIR	6 bar	6 bar

STANDARD	
DESIGN CODE	API 609
INSPECTION & TEST	API 598
END STANDARD	ASME B16.5 150LB
FACE TO FACE	API 609

TITLE : HANDLEVER LUGGED CONCENTRIC BUTTERFLY VALVE
NPS 2" ~ 6" - 150LB - LUG

APPROVED		DWG NO.	REV
CHECKED			
DRAWN			
DESIGNED		SCALE	UNIT mm

1.	Nondestructive Test		
1.1	Pressure Test	API 598	Yes
1.2	Chemical composition certification	Mandatory	Yes
1.3	Penetrant Test	All Body Surface	Yes
1.4	Magnetic particle testing	All Body Surface	Yes

SIZE	DN	L	ØD	n-UnC	&°
8"	200	60.6	298.5	8- UnC 3/4"	45°
10"	250	65.6	362.0	12- UnC 7/8"	30°
12"	300	76.9	431.8	12- UnC 7/8"	30°

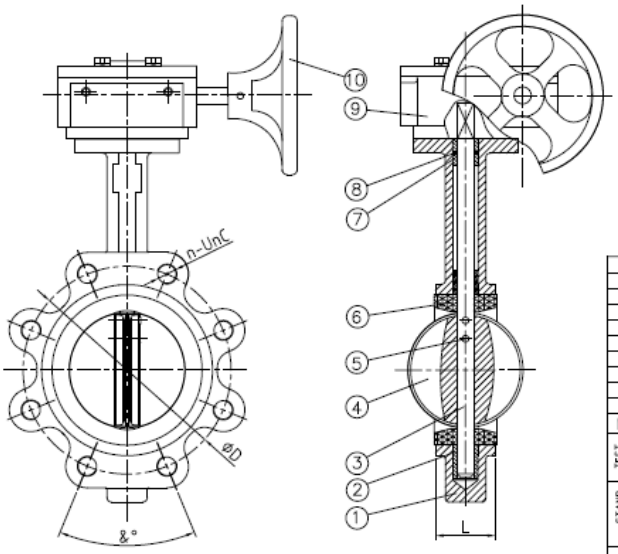

NO.	NAME	MATERIAL	QTY
10	Hand Wheel	GGG50	1
9	Worm Gear	GGG50	1
8	O-Ring	EPDM	1
7	Short Bushing	PTFE	2
6	Seat	EPDM	1
5	Taper Pin	A276 SS316	1
4	Disc	A351 CF8M	1
3	Stem	A276 SS416	1
2	Long Bushing	PTFE	2
1	Body	Ductile Iron ASTM A536	1

TEST PRESSURE	CWP:16Bar	SHELL	SEAL
	HYDROSTATIC	24 bar	17.6 bar
	AIR	6 bar	6 bar

STANDARD	
DESIGN CODE	API 609
INSPECTION & TEST	API 598
END STANDARD	ASME B16.5 150LB
FACE TO FACE	API 609

TITLE : GEAR OPERATION LUGGED CONCENTRIC BUTTERFLY VALVE
NPS 8" ~ 12" - 150LB - LUG

APPROVED		DWG NO.	REV
CHECKED			
DRAWN			
DESIGNED		SCALE	UNIT mm

1	Nondestructive Testing		
1.1	Pressure Test	API 598	Yes
1.2	Chemical composition certification	Mandatory	Yes
1.3	Penetrant Test	All Body Surface	Yes
1.4	Magnetic particle testing	All Body Surface	Yes